C.E. Electronics, Inc.
2107 Industrial Drive
Bryan, OH 43506
PH (419) 636-6705 FX (419) 636-2516
www.ceelectronics.com

SECXX-DETAIL2

Ver. 6 Rel. 4/14/2025

SECURITY
BUTTON INTERFAC

DETAILS for PROXIMITY READER

CE # 70400009

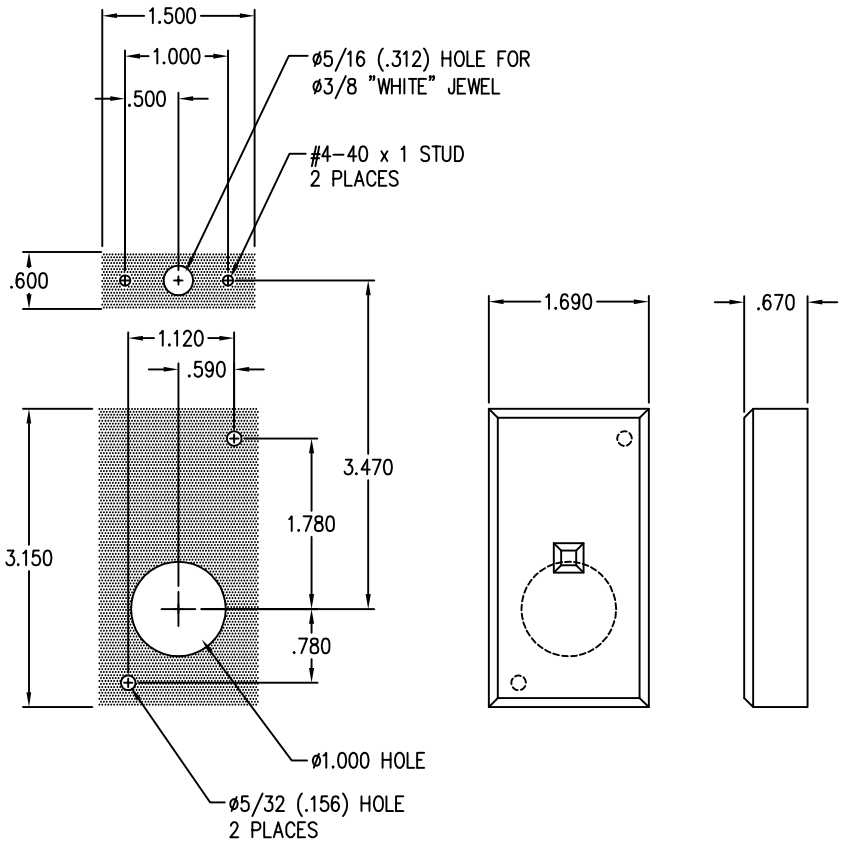
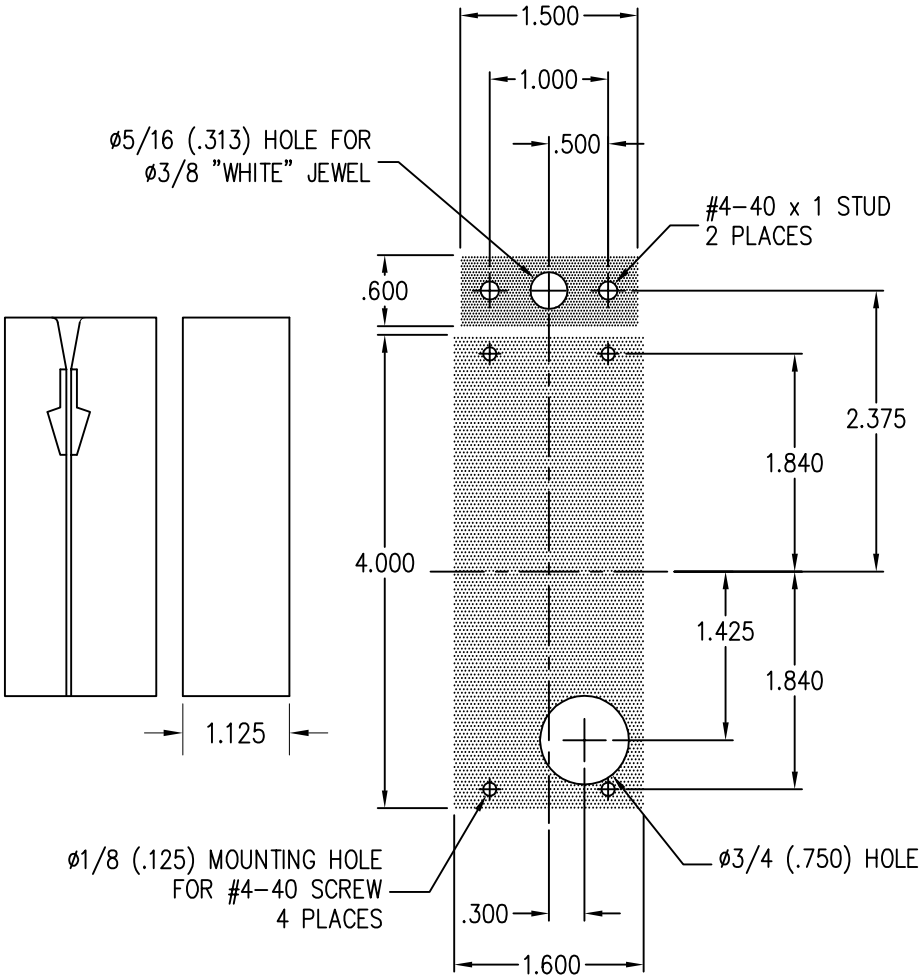
DETAIL for SWIPE READER