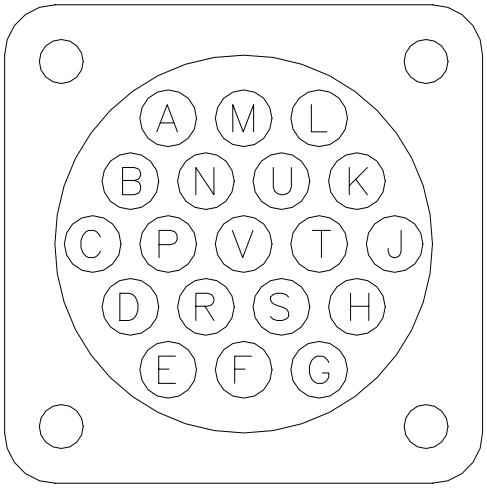
A
M
L
B
N
U
K
C
P
V
T
J
D
R
S
H
E
F
G

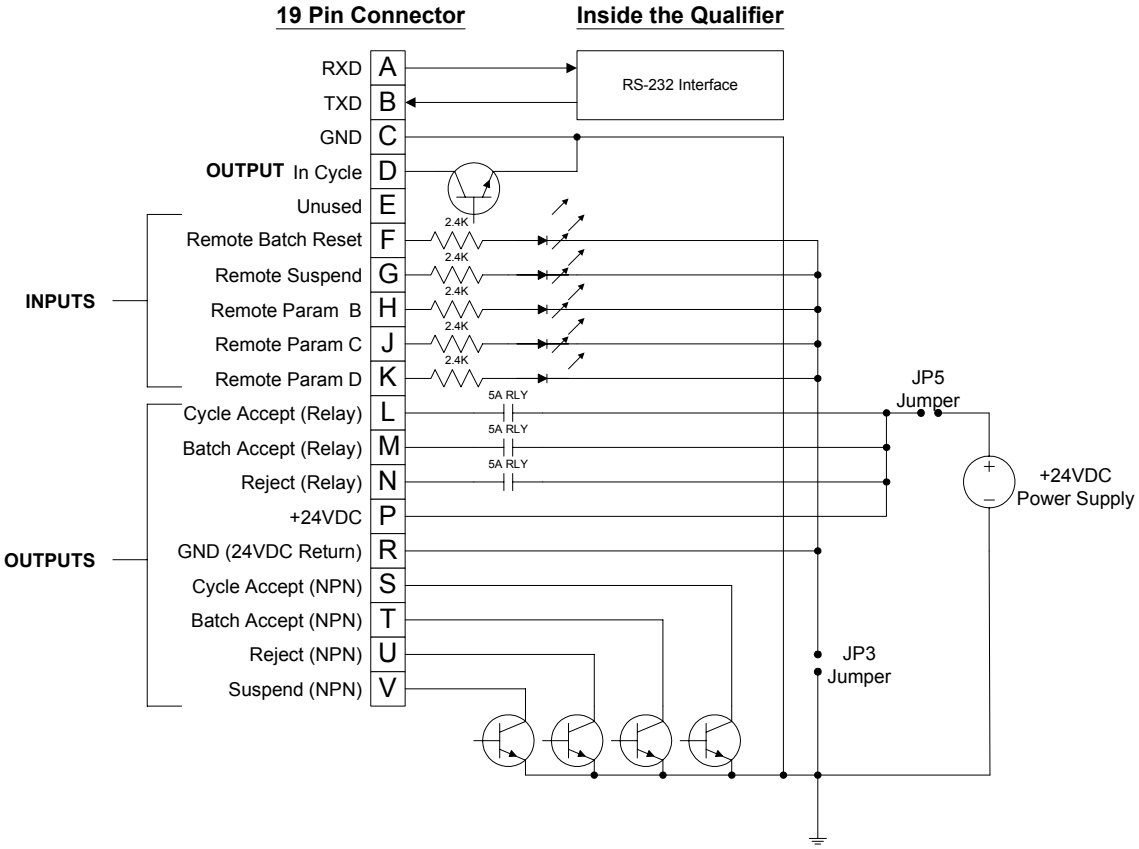
19 Pin Connector
Inside the Qualifier
RS-232 Interface
RXD A
TXD B
GND C
OUTPUT In Cycle D
Unused E
Remote Batch Reset F
Remote Suspend G
Remote Param B H
Remote Param C J
Remote Param D K
Cycle Accept (Relay) L
Batch Accept (Relay) M
Reject (Relay) N
+24VDC P
GND (24VDC Return) R
Cycle Accept (NPN) S
Batch Accept (NPN) T
Reject (NPN) U
Suspend (NPN) V
INPUTS
OUTPUTS
2.4K
5A RLY
JP5
Jumper
+24VDC
Power Supply
JP3
Jumper